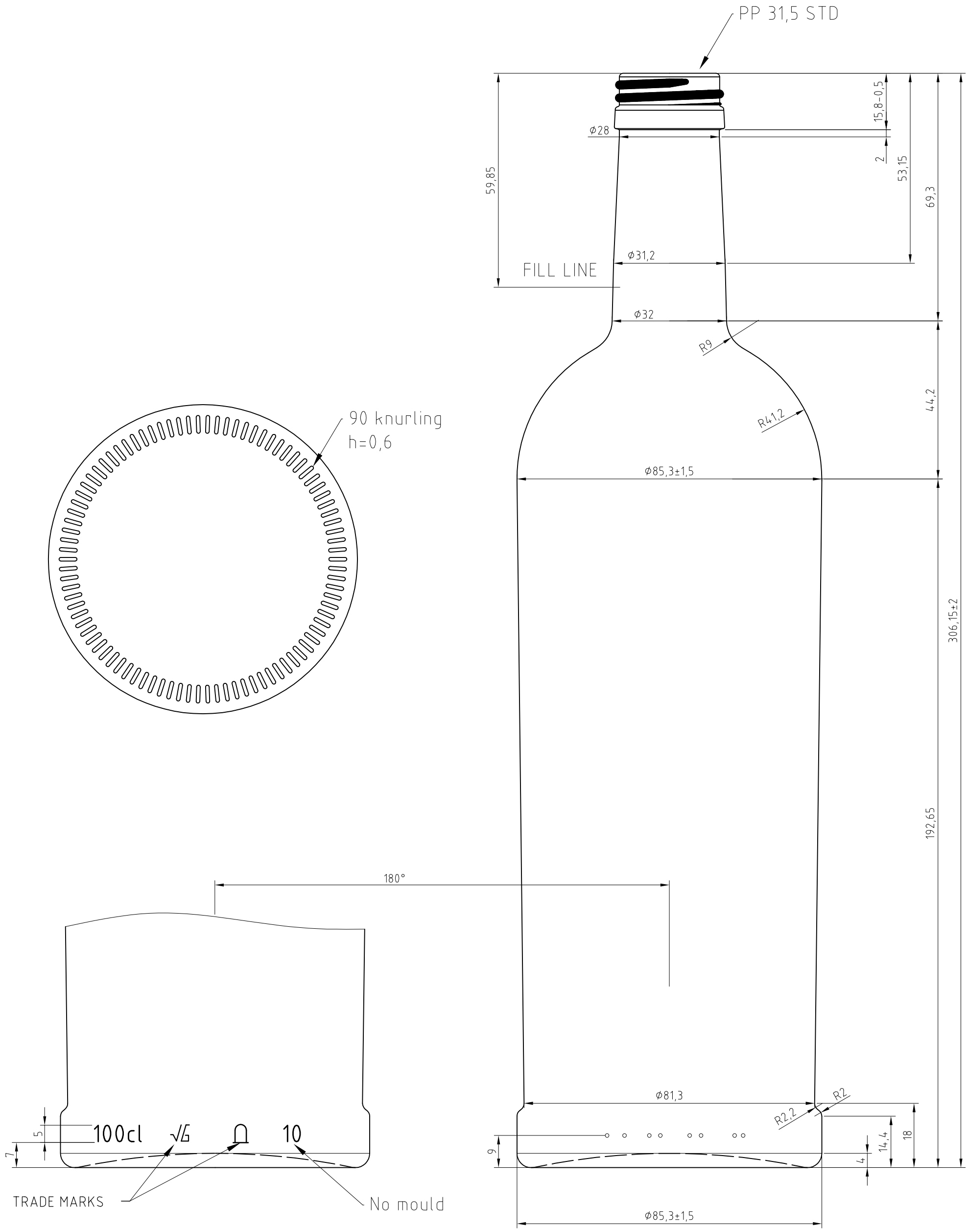


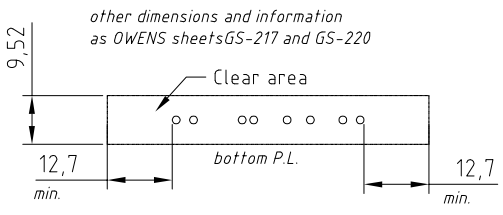


| NAME | DATE | REVISIONS | MOLD No: | 1203 | | A3 | YIOULA Glassworks Drujba Plovdiv - Athens | | |
|---|---|---|---|---|---|---|---|---|---|
| GL | 02/04/13 | 1. YIOULA GR CODE ASSIGNMENT FOR PRODUCTION | FINISH No: | 035 | | | | | |
| GL | 03/04/13 | 2. FINISH CHANGE TO STD | PROCESS | BB | MACHINE | | BOTTLE: NEF 1L St | | |
| | | | TYPE | RB | TIP ANGLE | | | | |
| | | | CAP. BRIMF. | 1021ml±10ml | REF MOLD: | | | CAT.No & DWG No: 72392/1 | |
| | | | CAP. FILLPT. | 1000ml±10ml | FINISH: | 31,5 STD | | | |
| | | | FILL LINE | 59.85mm | DRAWN | DIMOV | | | |
| | | | WEIGHT | 590g | CHECKED | ANGELOV | | DATE | 09/06/11 |
| | | | COLOR | | CONFIRMED | | | SHEET: 1/1 | SCALE: 1:1 |