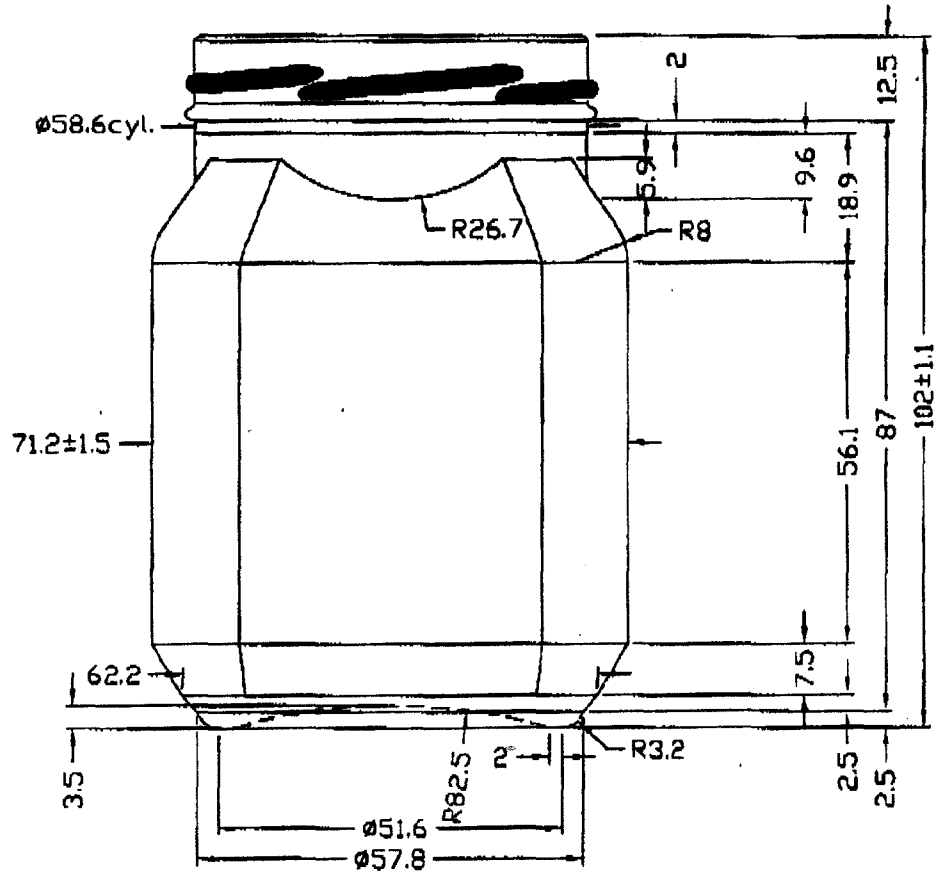

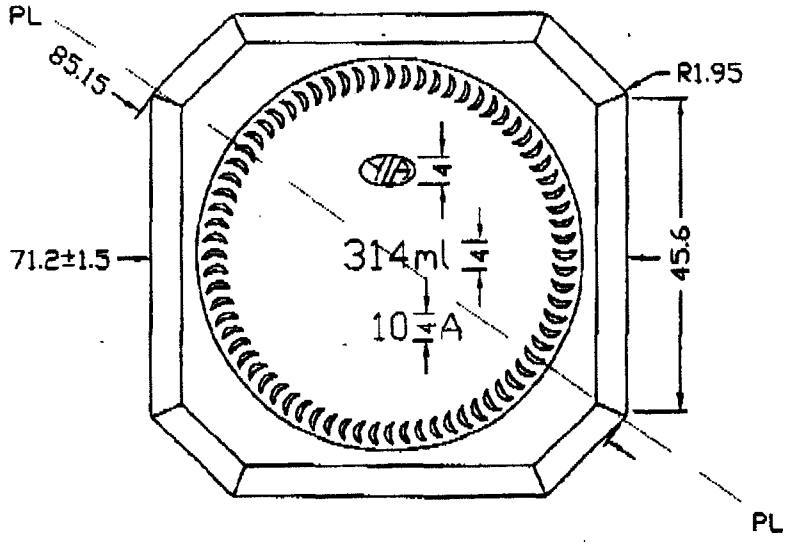

22/11/05	1. ΕΙΣΑΓΩΓΗ ΤΟΥ ΓΡΑΜΜΑΤΟΣ "Α"				
YIOULA S.A. GLASSWORKS		Mold No.	22290	Capacity	314(±5)cc
				Fill line	
		Bottle	JAR 314ml	Weight	250(±10.5)gr
DWG No. 22290/1 v.2		Customer		Finish	63 TO
Date: 22/11/05	Scale: 1:1	Machine	DG 5 1/2"	Color	FLINT

ΑΠΟ:GEORGOUDIS S.A. ΑΡ.ΦΑΞ :0030 421 047177 27 ΑΠΡ 2006 10:44 P1